Current part is item (17) on diagram. Available at www.oshkoshequipment.com

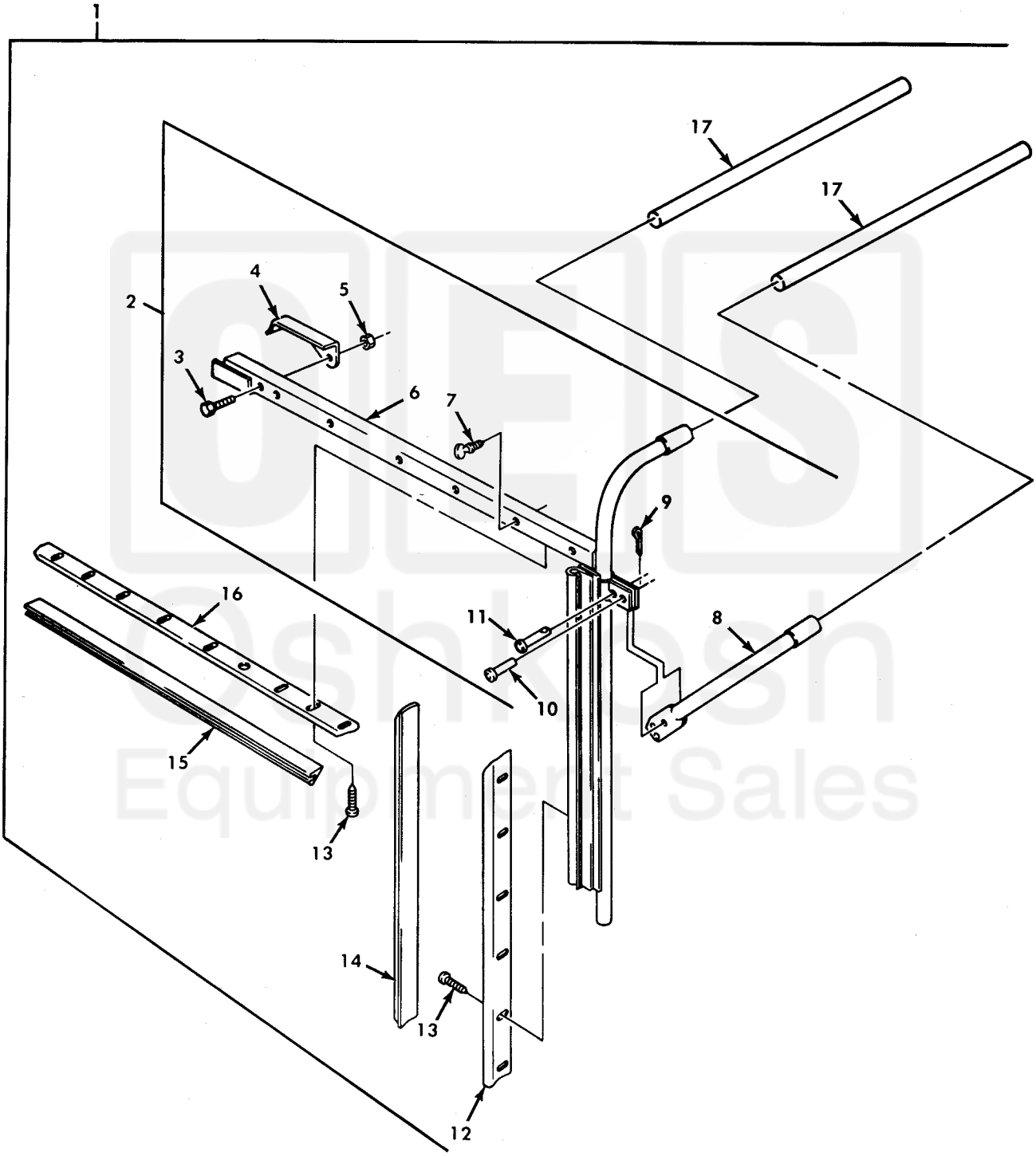

Figure 432. Soft Top Post and Rail Assembly.

Current part is item (17) on diagram. Available at www.oshkoshequipment.com

Current part is item (17) on diagram. Available at www.oshkoshequipment.com

(1) ITEM NO	(2) SMR CODE	(3) NSN	(4) CAGEC	(5) PART NUMBER	(6) DESCRIPTION AND USABLE ON CODE (UOC)	(7) QTY
					GROUP 2201 CANVAS,RUBBER,OR PLATIC ITEMS	
					FIG. 432 SOFT TOP POST AND RAIL ASSEMBLY	
1	PAOOO	2510-00-231-7482	19207	11608784	POST,VEHICULAR BODY RIGHT..... UOC:623,624,630,631,632	1
1	PAOOO	2510-00-740-9596	19207	7409596	POST PILLAR CAB TOP LEFT..... UOC:614,620,621,622,625,626,627,628,629, 633,634,635,637,638	1
1	PAOZZ	2540-00-740-9597	19207	7409597	POST ASSEMBLY,TOP,T RIGHT..... UOC:614,620,621,622,625,626,627,628,629, 633,634,635,637,638	1
1	PAOOO	2540-00-231-7480	19207	11593273	POST ASSEMBLY,VEHIC LEFT HAND CAB TOP COVER..... UOC:623,624,630,631,632	1
2	PAOOO	2510-00-740-9686	19207	7409686	.RAIL ASSEMBLY,SIDE LEFT..... UOC:614,620,621,622,625,626,627,628,629, 633,634,635,637,638	1
2	PAOOO	2510-00-740-9687	19207	7409687	.RAIL,ASSEMBLY RIGHT..... UOC:614,620,621,622,625,626,627,628,629, 633,634,635,637,638	1
2	PAOOO	2510-00-472-1693	19207	11608783	.RAIL,CAB TOP PILLAR RIGHT..... UOC:623,624,630,631,632	1
2	PAOOO	2510-00-472-1688	19207	11593274	.RAIL,CAB TOP PILLAR LEFT..... UOC:623,624,630,631,632	1
3	PAOZZ	5305-00-267-8955	80204	B1821BH025F138N	..SCREW,CAP,HEXAGON H.....	1
4	PAOZZ	2510-00-036-0298	19207	7005638	..CATCH,CAB TOP RIGHT.....	1
4	PAOZZ	2540-00-891-7830	19207	7005798	..CATCH,CAB TOP,R.S. LEFT.....	1
6	XAOZZ		19207	7005602	..SUPPORT,SOFT TOP,CA LEFT..... UOC:614,620,621,622,625,626,627,628,629, 633,634,635,637,638	1
6	XAOZZ		19207	7005603	..SUPPORT,SOFT TOP,CA RIGHT..... UOC:614,620,621,622,625,626,627,628,629, 633,634,635,637,638	1
6	XDOZZ		19207	11608782	..BAR ASSEMBLY RIGHT..... UOC:623,624,630,631,632	1
6	XDOZZ		19207	11593270	..BAR ASSEMBLY,COVER LEFT..... UOC:623,624,630,631,632	1
7	PAOZZ	5325-00-282-7435	19207	583244	..STUD,TURNBUTTON FAS.....	6
8	PAOZZ	2510-00-737-2711	19207	7372711	..BOW,SIDE RAIL..RIGHT.....	1
8	PAOZZ	2510-00-737-2712	19207	7372712	..BOW,SIDE RAIL..LEFT.....	1
9	PAOZZ	5315-00-839-2325	96152	A82-1	..PIN,COTTER..... UOC:614,620,621,622,625,626,627,628,629, 633,634,635,637,638	1
10	PAOZZ	5320-00-889-2632	96906	MS35743-38	..RIVET,SOLID..... UOC:614,620,621,622,625,626,627,628,629, 633,634,635,637,638	1
11	PAOZZ	5315-01-070-2168	96906	MS35810-11	..PIN,STRAIGHT,HEADED..... UOC:614,620,621,622,625,626,627,628,629, 633,634,635,637,638	1
12	PAOZZ	2510-00-693-0591	19207	7372718	.RETAINER,CAB TOP LEFT.....	1
12	PAOZZ	2510-00-693-0592	19207	7372719	.RETAINER,CAB TOP RIGHT.....	1
13	PAOZZ	5305-00-879-7941	96906	MS24617-31	.SCREW,TAPPING.....	15
14	PAOZZ	5330-00-737-2720	19207	7372720	.SEAL,NONMETALLIC SP LEFT.....	1

Current part is item (17) on diagram. Available at www.oshkoshequipment.com